PRODUCT CARD	
ORDER CODE	MTIC160HV1
PRODUCT WEIGHT (Kg)	~600

TRANSFORMER	
STOCK CODE	1012900588
TRANSFORMER POWER	160 kVA
INPUT - OUTPUT TYPE	Y - Y
INPUT VOLTAGE	230VAC Ph+N / 400VAC Ph-Ph
OUTPUT VOLTAGE	230VAC Ph+N / 400VAC Ph-Ph
SIZE(mm)(WxHxD)	665 x 620 x 390
FREQUENCY	50 Hz
WIRE TYPE	ALUMINIUM
WEIGHT (Kg)	~600

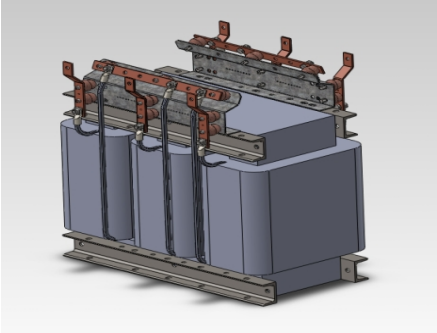

CHASSIS	
CHASSIS CODE	
SIZE(mm)(WxHxD)	
MECHANICAL PROTECTION CLASS	IP 20
WEIGHT (Kg)	